Quick-Mount Quick Start Guide

Package Contents



Mount Arm



Universal Ball Mount



Bracket Mount

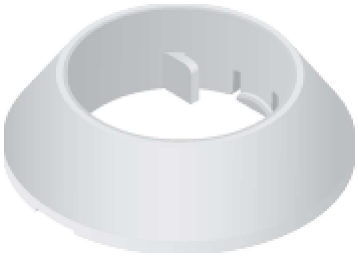

Rotation Collar

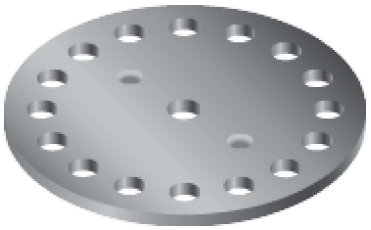

Stacking Washer

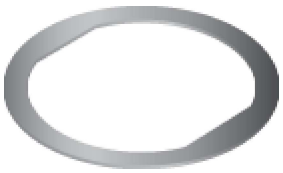

Ball Mount Washer

Supported Products

The Quick Mount is compatible with the GigaBeam™, LTU™ Lite, NanoBeam®, NanoStation®, NanoStationloco, and UniFi® Building-to-Building Bridge.

- NBE-2AC-13, NBE-M5-16, UBB, or GBE using the Universal Ball Mount
- NBE-5AC-Gen2 or NBE-M5-19 using the Universal Ball Mount and Metal Washer
- loco5AC, NS-5AC, or LTU-Lite using the Ball Mount Assembly

Quick-Mount Quick Start Guide





Hardware Overview

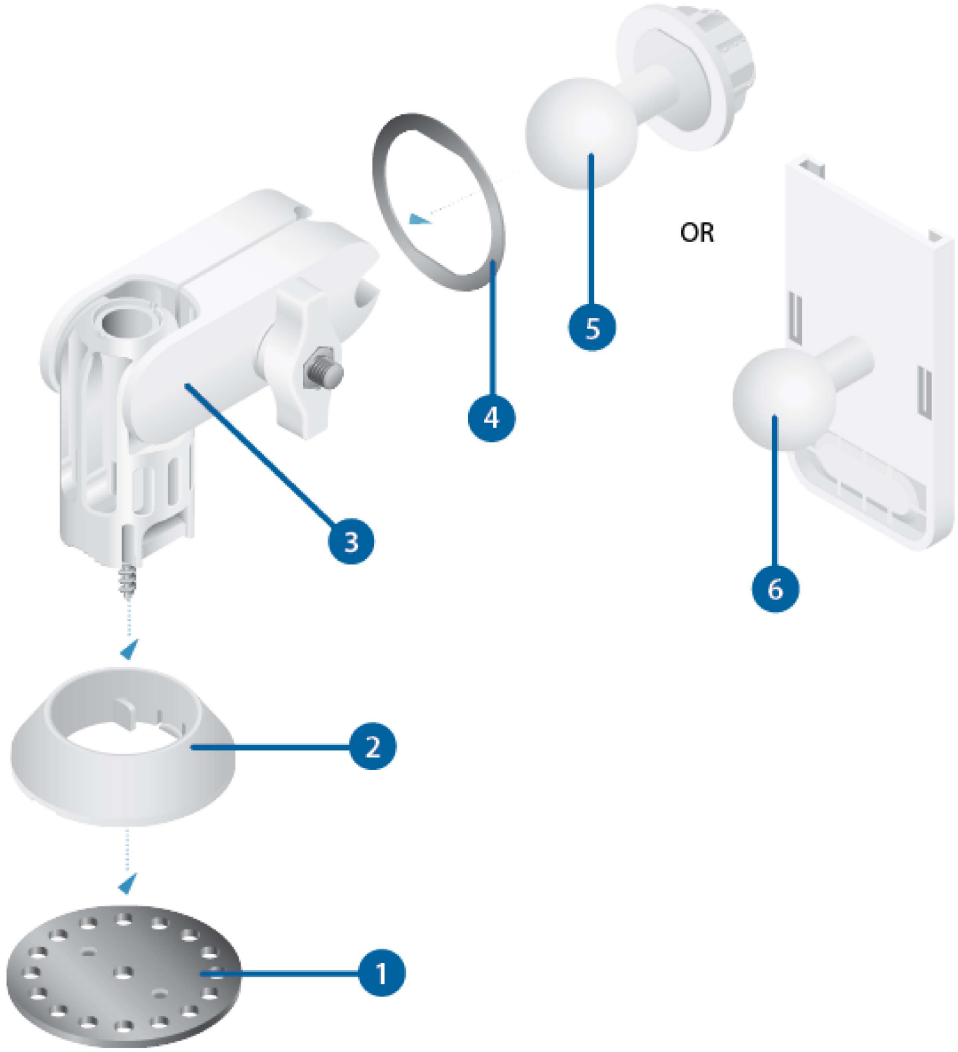

1	Stacking Washer

2 Rotation Collar
Part of the Quick-Mount assembly that stabilizes the base of the Mount Arm.
3 Mount Arm
Adjustable mount compatible with a variety of Ubiquiti CPE devices.
4 Ball Mount Washer
Used in conjunction with the Universal Ball Mount when installing the NBE-5AC-Gen2 or NBE-M5-19.
5 Universal Ball Mount
Used when installing the NBE-5AC-Gen2, NBE-2AC-13, NBE-M5-19, NBE-M5-16, UBB, or GBE.
6 Bracket Mount
Used when installing the loco5AC, NS-5AC, or LTU-Lite.

Models

- NBE-2AC-13
- NBE-M5-16
- UBB
- GBE

Components

Quick-Mount Quick Start Guide

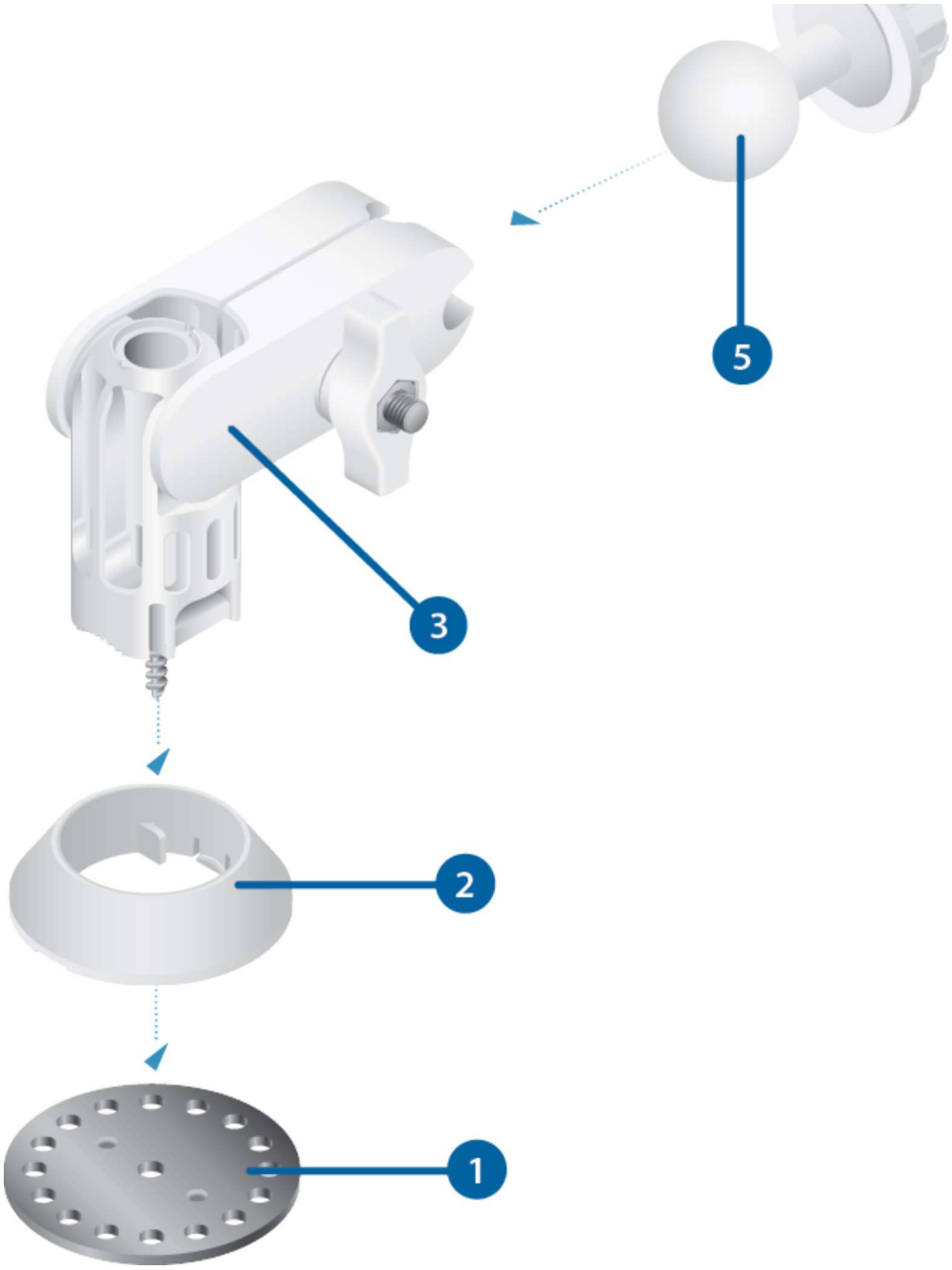

Note: The device's Lock Ring will also be used.

Models

- NBE-5AC-Gen2
- NBE-M5-19

Components

Quick-Mount Quick Start Guide

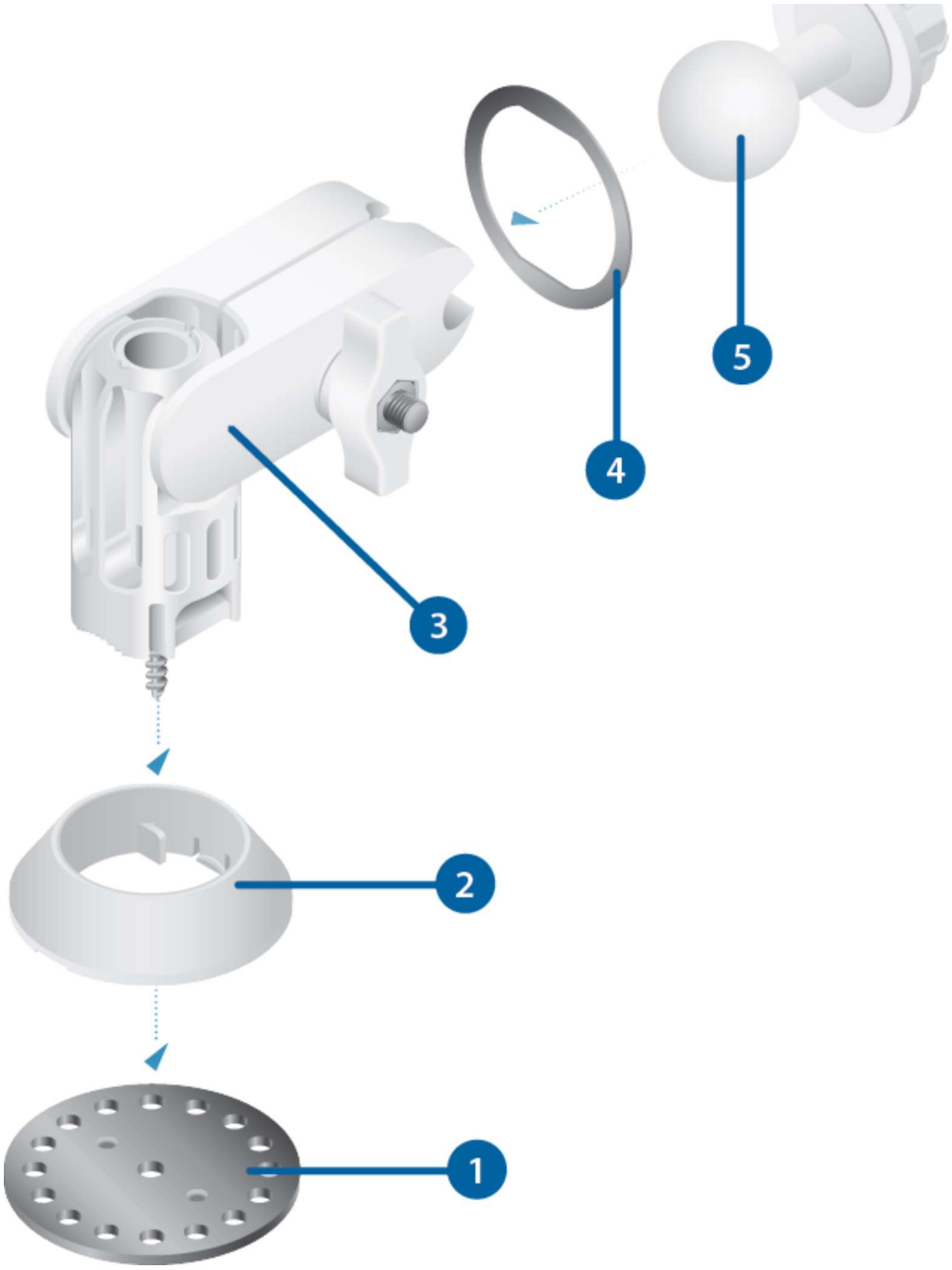

Note: The device's Lock Ring will also be used.

Models

- loco5AC
- NS-5AC
- LTU-Lite

Components

Quick-Mount Quick Start Guide

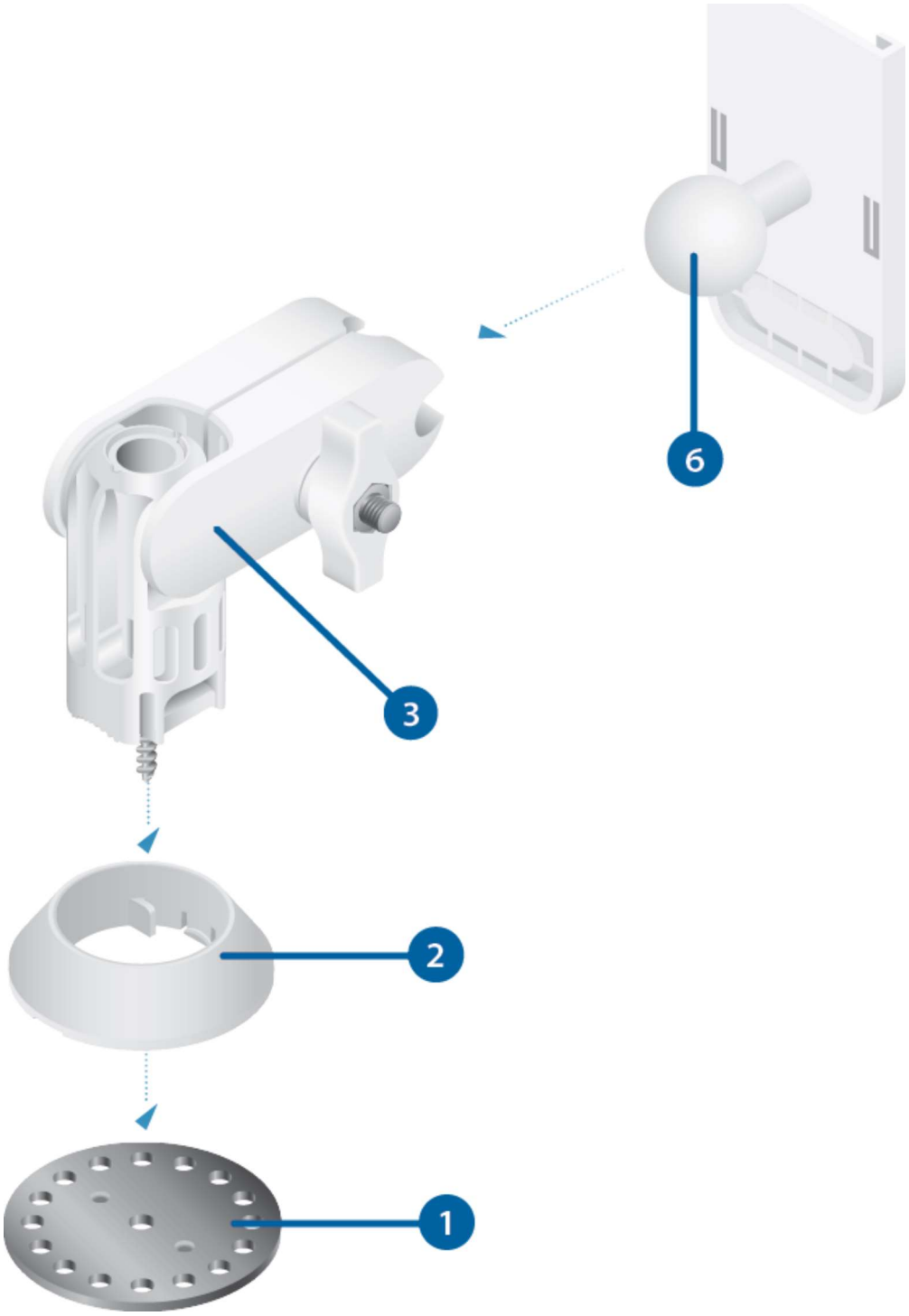

Installation

Before You Begin

Insert the Mount Arm into the Rotation Collar and press until it is locked in.

Quick-Mount Quick Start Guide



Note: The screw end should extend past the Rotation Collar for installation, as shown below.

Quick-Mount Quick Start Guide



1.

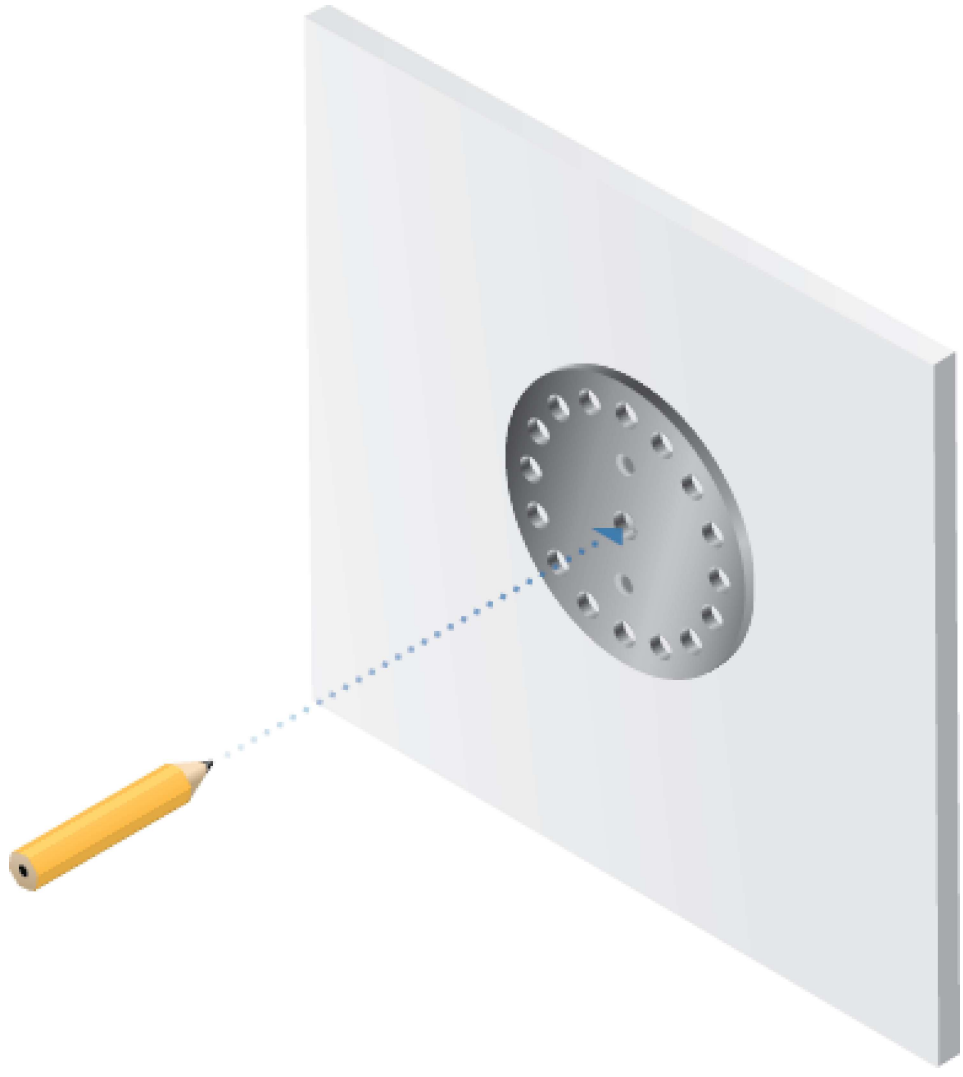

Quick-Mount Quick Start Guide



Quick-Mount Quick Start Guide

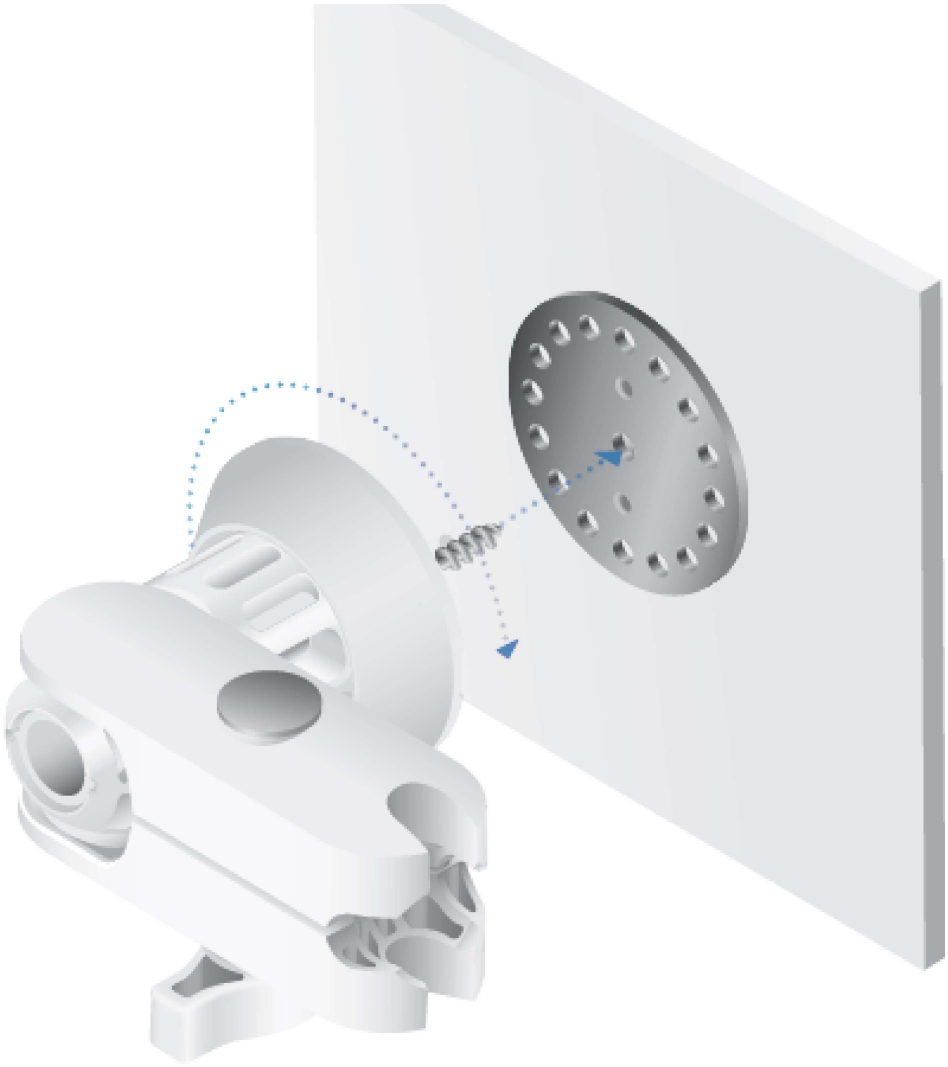

Quick-Mount Quick Start Guide



4.

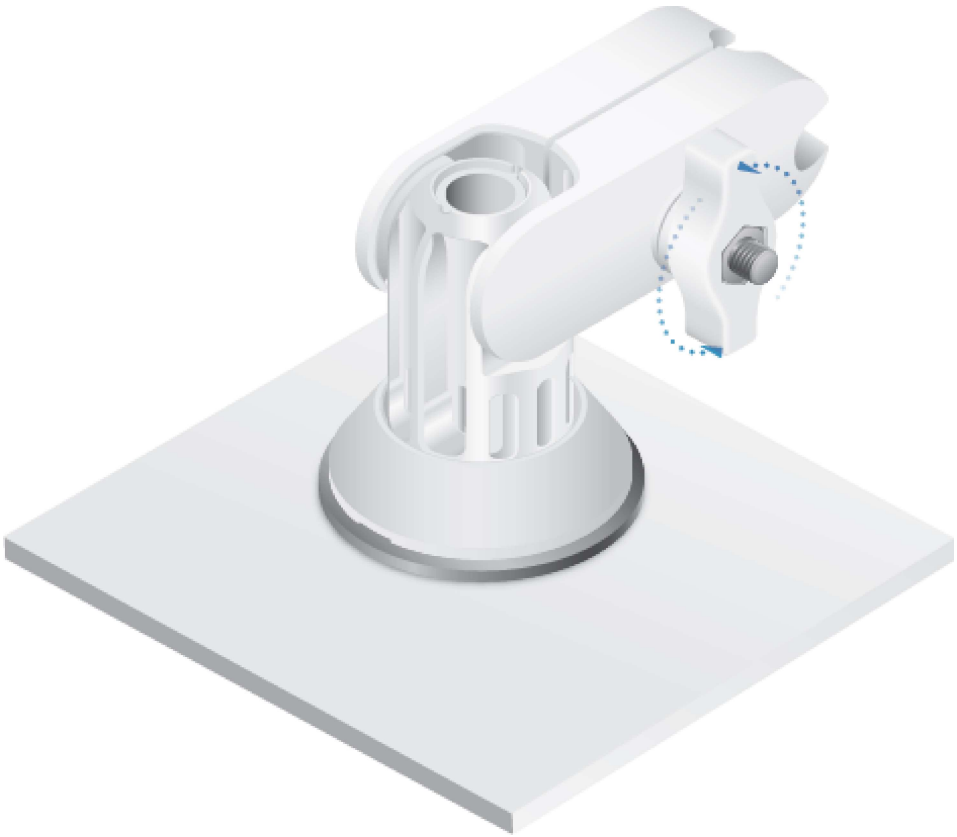

Quick-Mount Quick Start Guide



Note: Add the Ball Mount Washer when installing the NBE-5AC-Gen2 or NBE-M5-19.

OR



Quick-Mount Quick Start Guide

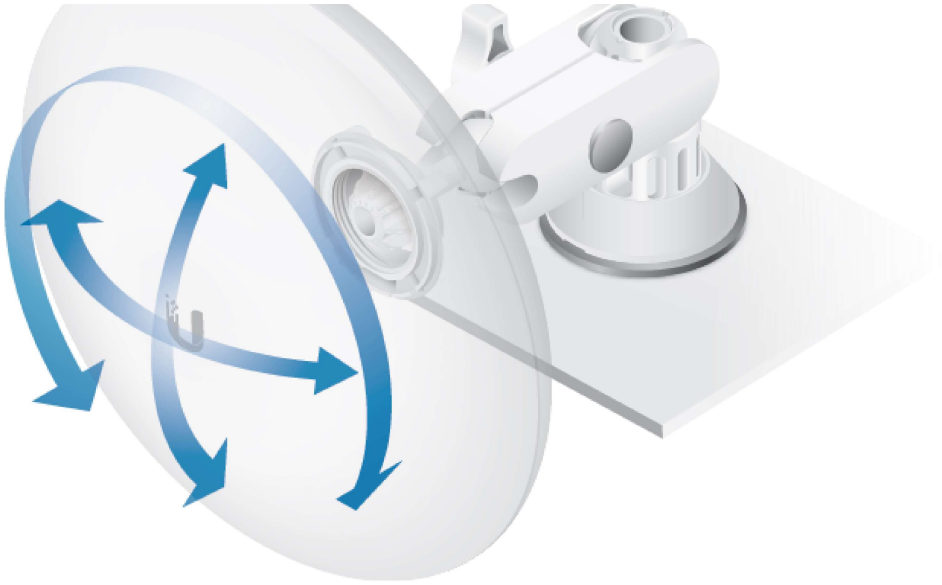

OR

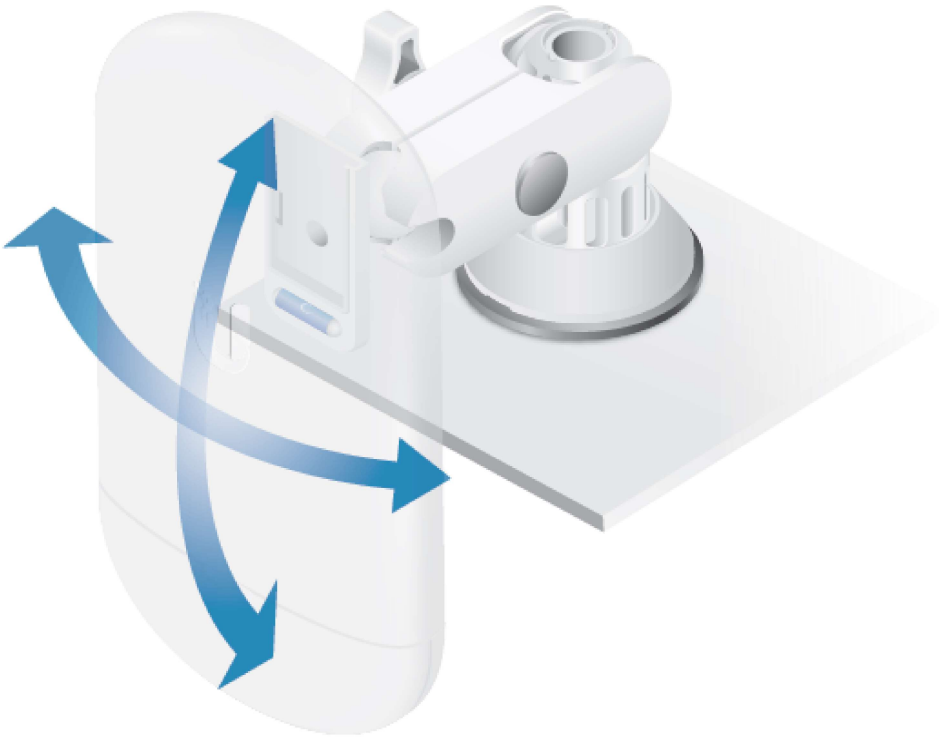

Quick-Mount Quick Start Guide



OR



Specifications

Quick-Mount Quick Start Guide

Dimensions	104 x 122 x 81 mm (4.09 x 4.80 x 3.19")
Weight	375 g (0.83 lb)
Device Support Ball Mount Assembly Universal Ball Mount Universal Ball Mount with Ball Mount Washer	 loco5AC, NS-5AC, or LTU-Lite NBE-2AC-13, NBE-M5-16, UBB, or GBE NBE-5AC-Gen2, NBE-M5-19

Limited Warranty

ui.com/support/warranty

The limited warranty requires the use of arbitration to resolve disputes on an individual basis, and, where applicable, specify arbitration instead of jury trials or class actions.

Declaration of Conformity

Online Resources





© 2019-2020 Ubiquiti Inc. All rights reserved.